TOPTEK
HARDWARE ELECTRONIC COMPONENTS
www.toptek-co.com

RoHS 2002/95/EC

Housing Wafer Terminal

2.0mm Wafer Right Angle / Straight Type

Specifications
Current Rating: 3A AC,DC
Voltage Rating: 250V AC,DC
Temperature Range: -25°C to +85°C
Contact Resistance: 10mΩ Max
Insulation Resistance: 1000MΩ Min
Withstanding Voltage: 800V AC/minute
Terminal: Brass / Gold & Tin Plated
Material:Nylon 66 & Nylon 6T,UL94V-0

No. of Contacts	Dimensions	
	A	B
2x2	2.00	6.00
2x3	4.00	8.00
2x4	6.00	10.00
2x5	8.00	12.00
2x6	10.00	14.00
2x7	12.00	16.00
2x8	14.00	18.00
2x9	16.00	20.00
2x10	18.00	22.00
2x11	20.00	24.00
2x12	22.00	26.00
2x13	24.00	28.00
2x14	26.00	30.00
2x15	28.00	32.00
2x16	30.00	34.00
2x17	32.00	36.00
2x18	34.00	38.00
2x19	36.00	40.00
2x20	38.00	42.00

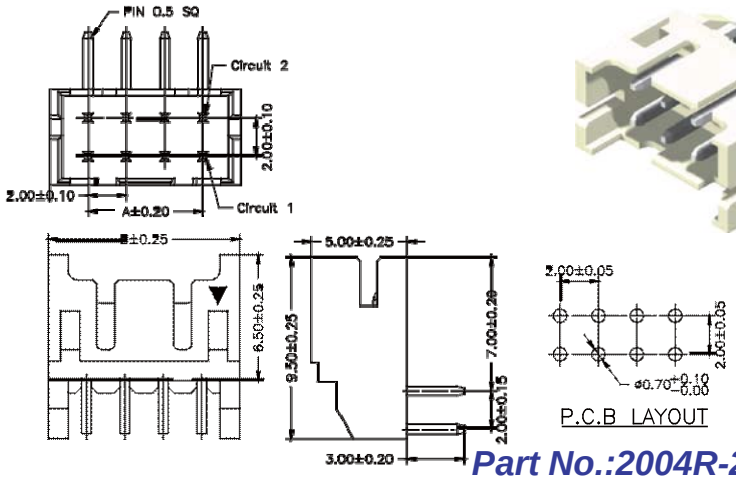

Part No.:2004R-2XXTW-L

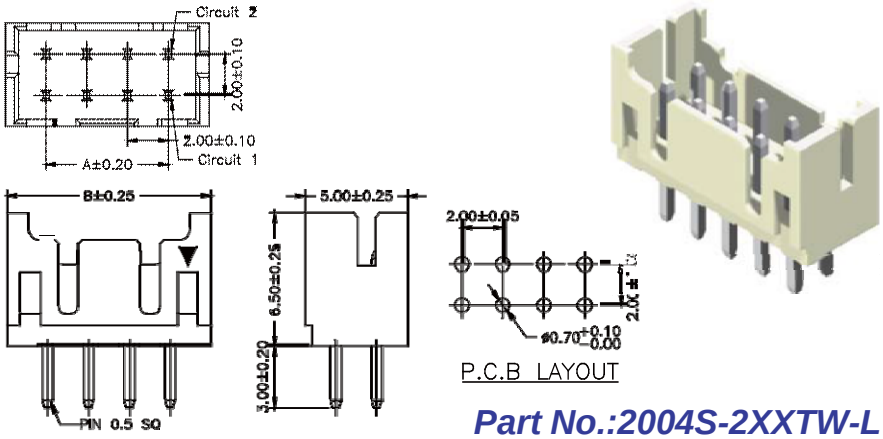

Part No.:2004S-2XXTW-L

No. of Contacts	Dimensions	
	A	B
2x2	2.00	8.00
2x3	4.00	10.00
2x4	6.00	12.00
2x5	8.00	14.00
2x6	10.00	16.00
2x7	12.00	18.00
2x8	14.00	20.00
2x9	16.00	22.00
2x10	18.00	24.00
2x11	20.00	26.00
2x12	22.00	28.00
2x13	24.00	30.00
2x14	26.00	32.00
2x15	28.00	34.00
2x16	30.00	36.00
2x17	32.00	38.00
2x18	34.00	40.00
2x19	36.00	42.00
2x20	38.00	44.00

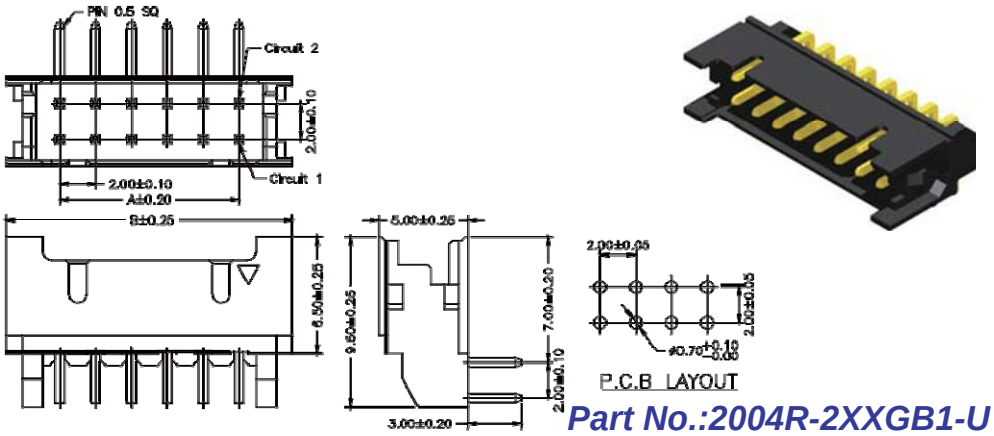

Part No.:2004R-2XXGB1-U

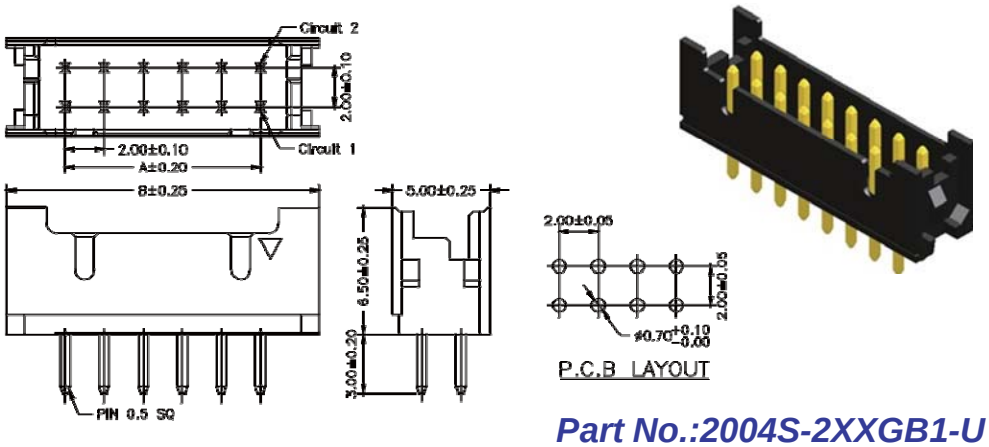

Part No.:2004S-2XXGB1-U