TOPTEK®
HARDWARE ELECTRONIC COMPONENTS
www.toptek-co.com

RoHS 2002/95/EC

E.SATA Conn. Series

E SATA

Specifications
Current Rate:1.5 AMP
Insulation Resistance:1000MΩ Max
Contact Resistance:30 mΩ Min
Dielectric Voltage:500V AC for one minute
Operation Temperature:-55 ˚ C to +125 ˚C

Material
Insulator:Polyester,UL 94V-0
◎Standard: Housing:Nylon 66
eSATA:Nylon 46
Terminal:Brass
Plating:Selective Plating

Standard	Dim A
ESATAU-15SB-1-L	2.15
ESATAU-15SB-2-L	3.10

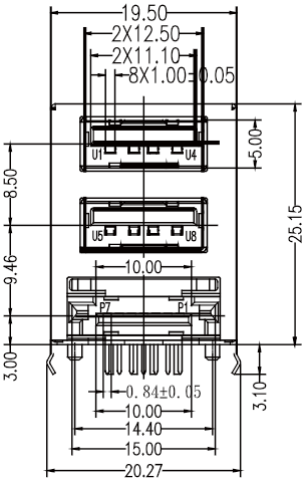

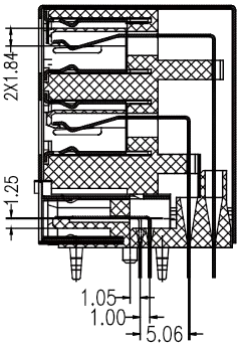

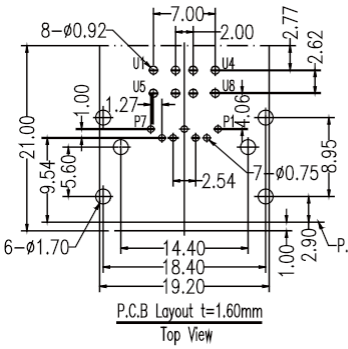

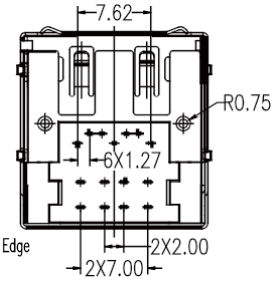

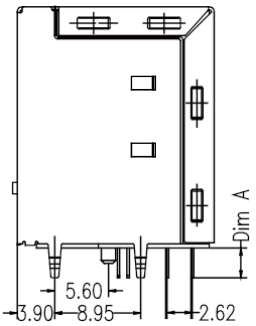

Part No.:ESATAU-15SB-L

Specifications
Current Rate:1.5 AMP
Insulation Resistance:1000MΩ Max
Contact Resistance:30 mΩ Min
Dielectric Voltage:500V AC for one minute
Operation Temperature:-55 ˚ C to +125 ˚ C

Material
Insulator:Polyester,UL 94V-0
◎Standard: Housing:PBT
Retainer:Nylon 66
Terminal:Brass
Plating:Selective Plating

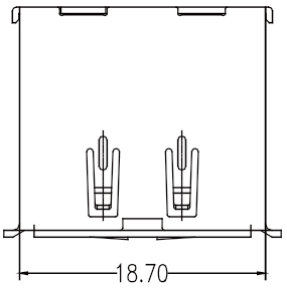

Standard	Dim A
ESATAUA-11SB-1-L	2.15
ESATAUA-11SB-2-L	3.10

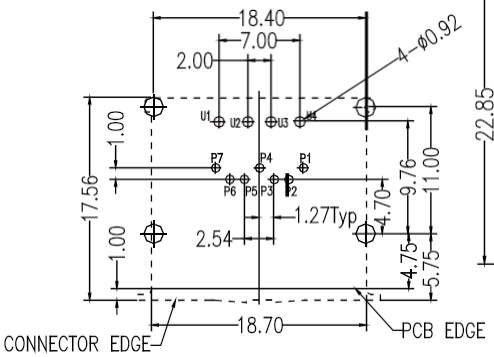

Recommended PCB Layout
(PCB TOLERANCE ±0.05)

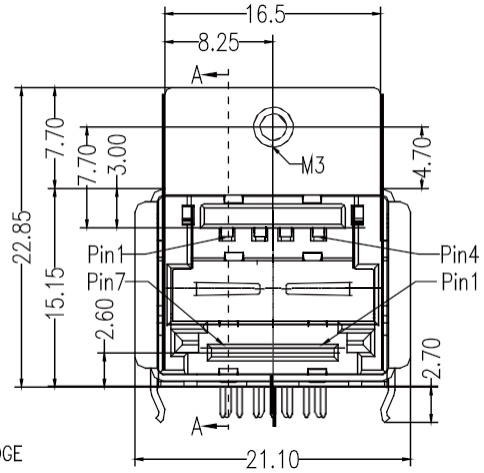

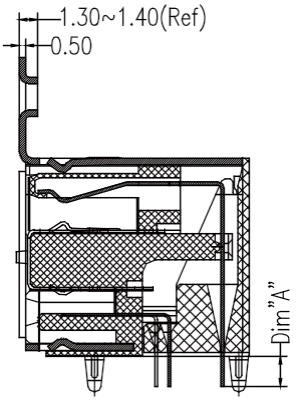

Part No.:ESATAUA-11SB-L